WCT 68 - LOTUS FORD 49B

South Africa G.P.	Graham Hill 2nd	Great Britain G.P.	Graham Hill Ret.
Spain G.P.	Graham Hill 1st	Germany G.P.	Graham Hill 2nd
Monaco G.P.	Graham Hill 1st	Italy G.P.	Graham Hill Ret.
Belgium G.P.	Graham Hill Ret.	Canada G.P.	Graham Hill 4th
Netherlands G.P.	Graham Hill 9th	United States G.P.	Graham Hill 2nd
France G.P.	Graham Hill Ret.	Mexico G.P.	Graham Hill 1st

GRAHAM HILL
WORLD CHAMPION 1968
MONACO G.P. 1968

CLASSIC TEAM LOTUS

TAMEO KITS

www.tameokits.com

COLOUR CONVERSION - CONVERSIONE COLORI - FARBENUMWANDLUNG
CONVERSION DE COULEUR - COLORES CONVENSIONADOS

GUN METAL GRIGIO FUCILE GEWERGRAUE GRIS FUSIL GRIS FUSIL **TAMIYA TS38**	SEMI GLOSS BLACK NERO SEMI LUCIDO SEIDENMATT SCHWARZ NOIR SEMI BRILLANT NEGRO SEMIBRILLANTE **TAMIYA TS29**	ALUMINIUM ALLUMINIO ALUMINIUM ALUMINIUM ALUMINIO **TAMIYA TS17**	SILVER ARGENTO SILBER ARGENT PLATA **TAMIYA TS30**	BLACK NERO SCHWARZ NOIR NEGRO **TAMIYA TS14**	BROWN MARRONE BRAUN MARRON MARRÓN **TAMIYA X9**
LIGHT GUN METAL GRIGIO FUCILE CHIARO LIGHT GUN METAL GRIS FUSIL CLAIR GRIS FUSIL CLARO **TAMIYA TS42**	RED ROSSO ROT ROUGE ROJO **RAL 3020**	MICA RED ROSSO MICA GLIMMERROT ROUGE DE MICA ROJO MICA **TAMIYA TS39**	POLISHED ALUMINIUM ALLUMINIO LUCIDATO ALUMINIUM POLIERT ALUMINIUM POLI ALUMINIO PULIDO **ALCLAD ALC-105**	WHITE BIANCO WEISS BLANC BLANCO **TAMIYA TS26**	GOLD ORO GOLD OR ORO **TAMIYA TS21**

PHOTOETCHED - FOTOINCISIONI - FOTOGEAETZT
PHOTOGRAVURES - FOTOGRABADO

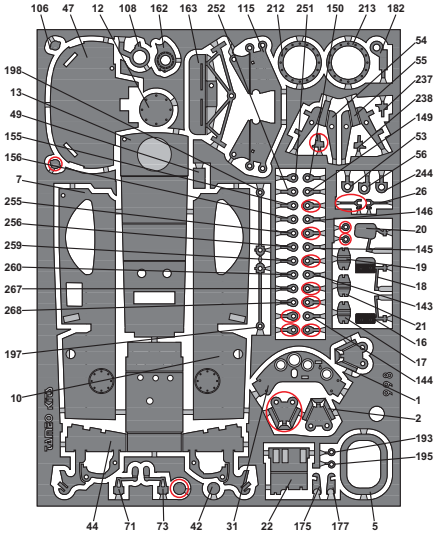

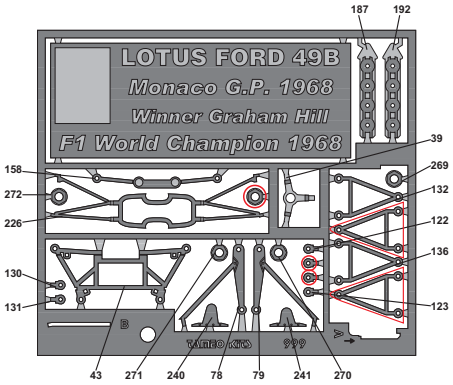

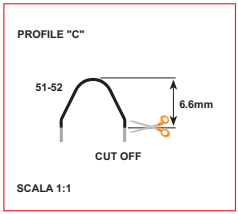

Scale
Scala
Maßstab
Echelle
Escala

Cut Off
Tagliare
Abschnitten
Découpé
Cortar

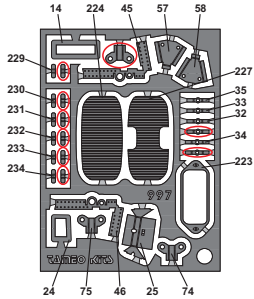

Spare parts
Pezzi di ricambio
Pièces de rechange
Ersatzteile
Piezas de repuesto

TAMEO KITS srl

Via Valle, 111 - P.O. Box 61
17022 BORGIO VEREZZI SV ITALY
Tel. 39 019 - 615.250 Fax. 39 019 - 615.310

website www.tameokits.com
e-mail sales@tameokits.com
e-mail technical@tameokits.com

Made in Italy. Collector 1/43 Scale Models. Vietata la vendita ai minori di 14 anni. Nocivo per ingestione. Conservare fuori dalla portata dei bambini. Tameo Kits declina ogni responsabilità per un uso improprio del prodotto.

Made in Italy. Collector 1/43 Scale Models. Not for sale to persons under 14 years of age. Dangerous if swallowed. Keep out of reach of children. Tameo Kits not held responsable for any damage or injury resulting from improper use of the product.

Made in Italy. Collector 1/43 Scale Models. Vente interdite aux enfants de moins de 14 ans. Dangereux si avalé. Conserver hors de la portée des enfants. Tameo Kits décline toute responsabilité dans le cas de dommages dérivants de l'usage non approprié du produit.

Made in Italy. Collector 1/43 Scale Models. Verkauf an judendliche unter 14 Jahren verboten. Schadlich bei Einnahme. Von Kindern ferhalten. Tameo Kits Lehnt jene Verantwortung bei unkorrektem Gebraucht seines Produktes ab.

Hecho en Italia. Coleccion de modelos a escala 1/43. Prohibida la venta a menores de 14 años. No comestible. Mantener fuera del alcanc e de los niños. Tameo Kits no se hace responsable de los daños causados por el uso incorrecto de este producto.

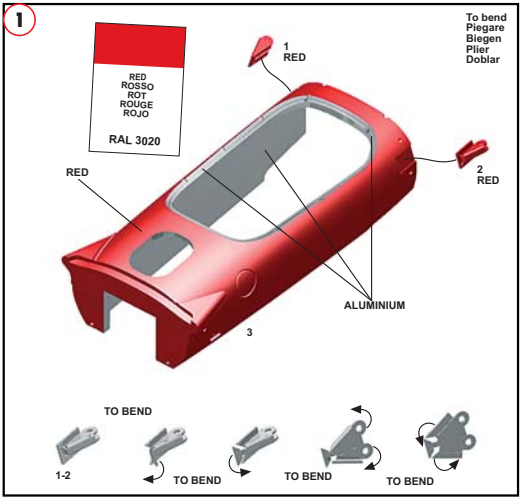
1
RED
RED
ROSSO
ROT
ROUGE
ROJO
RAL 3020
To bend
Piegare
Biegen
Plier
Doblar
1
RED
2
RED
RED
ALUMINIUM
3
TO BEND
1-2
TO BEND
TO BEND
TO BEND

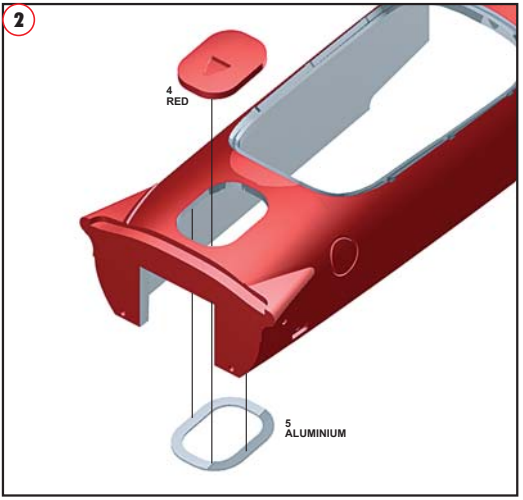
2
4
RED
5
ALUMINIUM

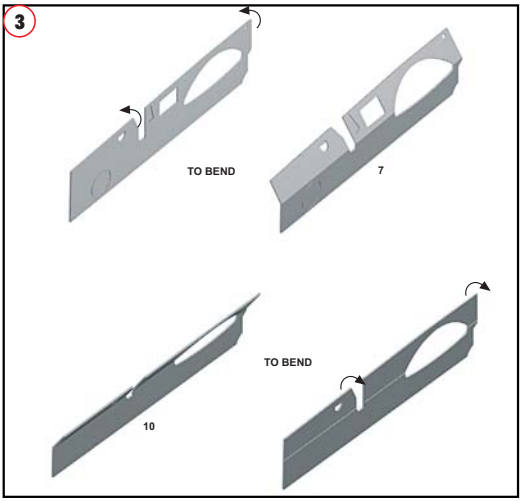
3
TO BEND
7
TO BEND
10

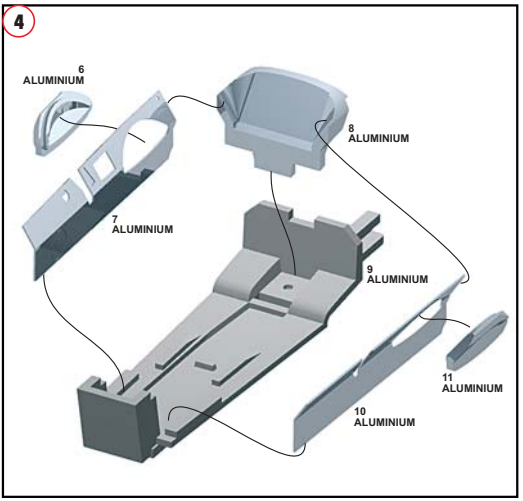
4
6
ALUMINIUM
8
ALUMINIUM
7
ALUMINIUM
9
ALUMINIUM
11
ALUMINIUM
10
ALUMINIUM

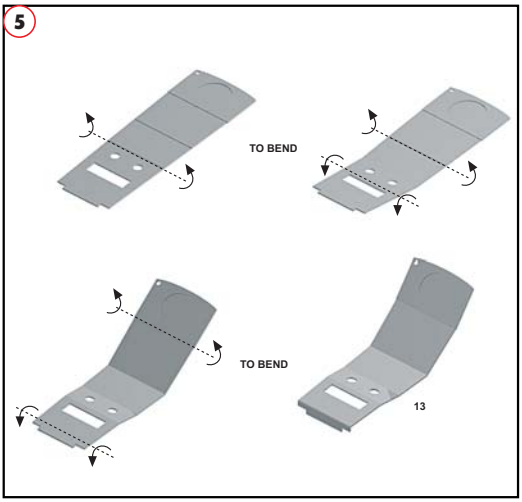
5
TO BEND
TO BEND
13

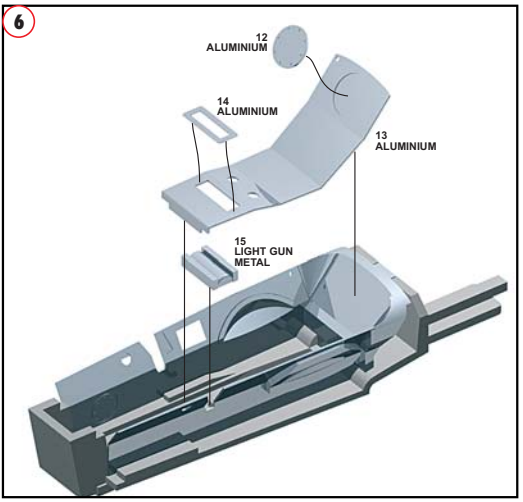
6
12
ALUMINIUM
14
ALUMINIUM
13
ALUMINIUM
15
LIGHT GUN
METAL

7

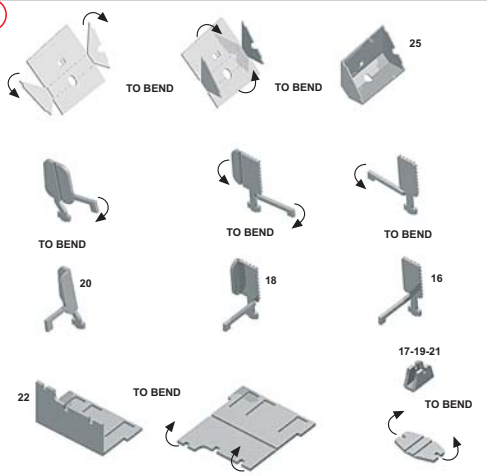

8

No paint
Non colorare
Keine Farbe
Pas de peinture
Sin pintura

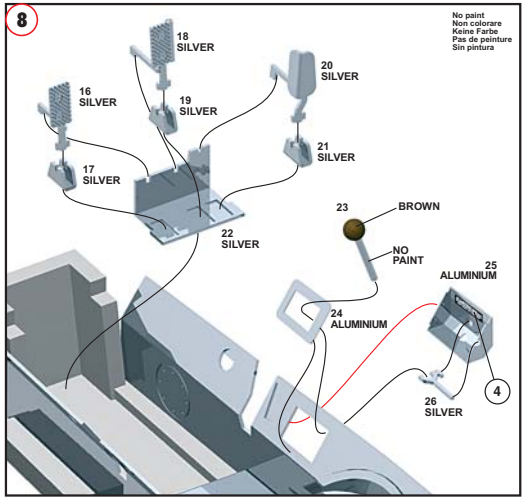

9

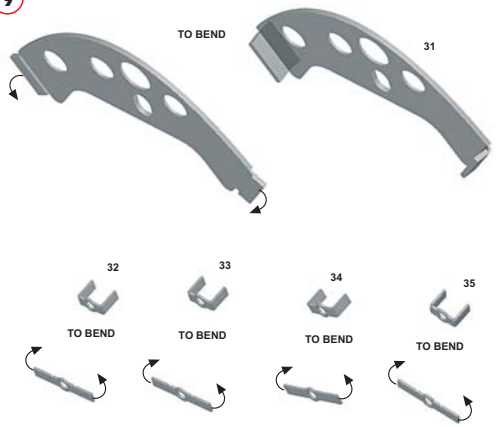

10

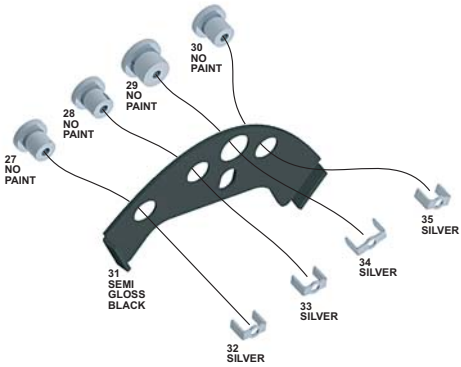

11

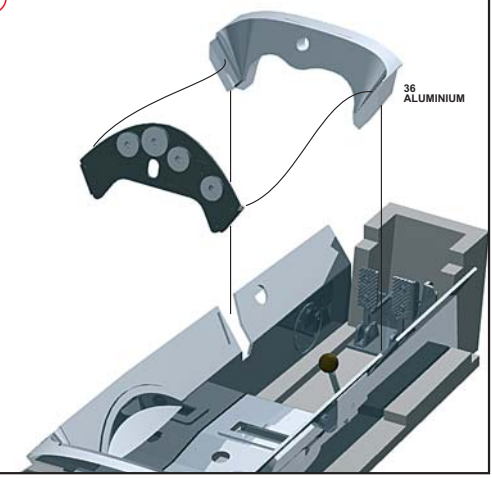

12

PARTS N.40
STEEL WIRE Ø 0.6mm
LENGHT 20mm

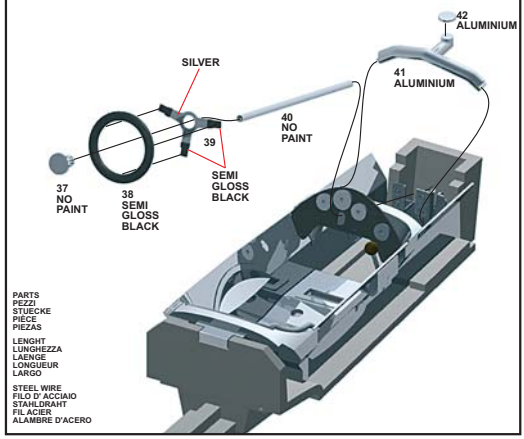

PARTS
PEZZI
STUECKE
PIÈCE
PIEZAS

LENGHT
LUNGHEZZA
LAENGE
LONGUEUR
LARGO

STEEL WIRE
FILO D' ACCIAIO
STAHLDRAHT
FIL ACIER
ALAMBRE D'ACERO

13

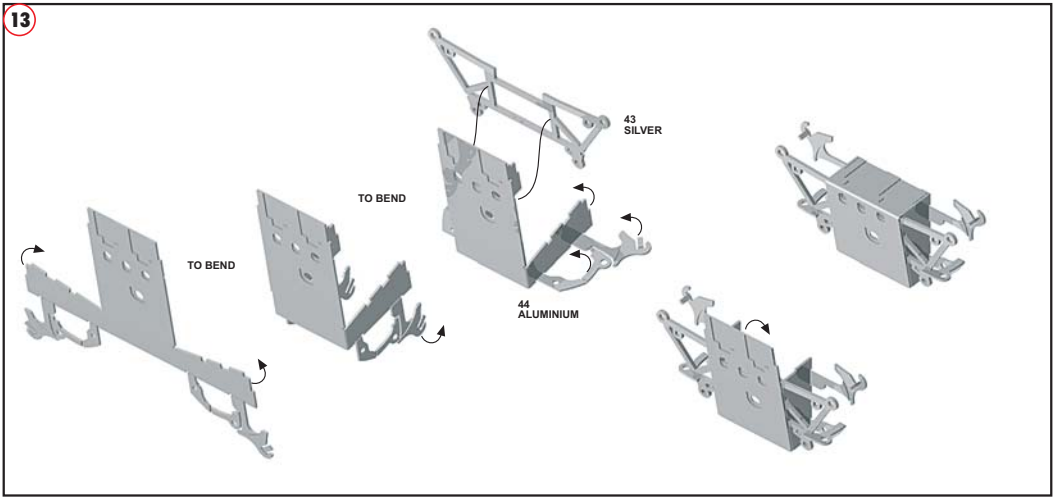
43
SILVER
TO BEND
TO BEND
44
ALUMINIUM

14

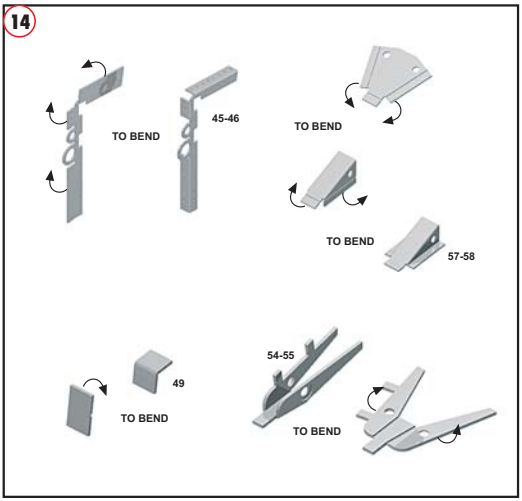
TO BEND
45-46
TO BEND
TO BEND
57-58
54-55
49
TO BEND
TO BEND

15

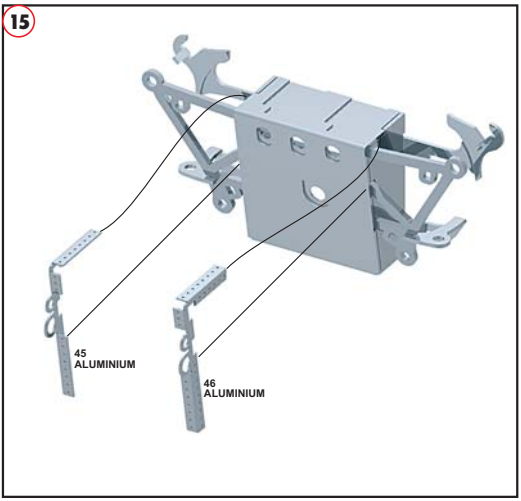
45
ALUMINIUM
46
ALUMINIUM

16

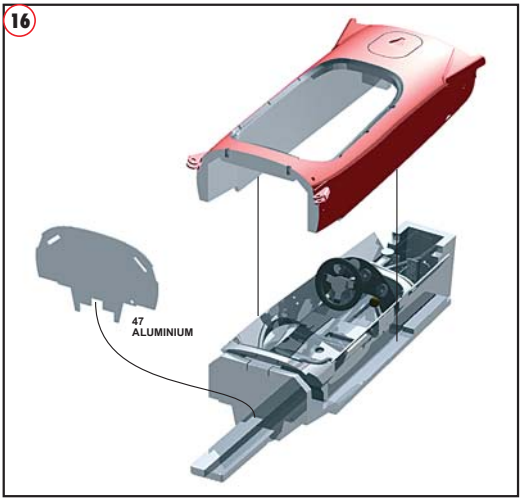
47
ALUMINIUM

17

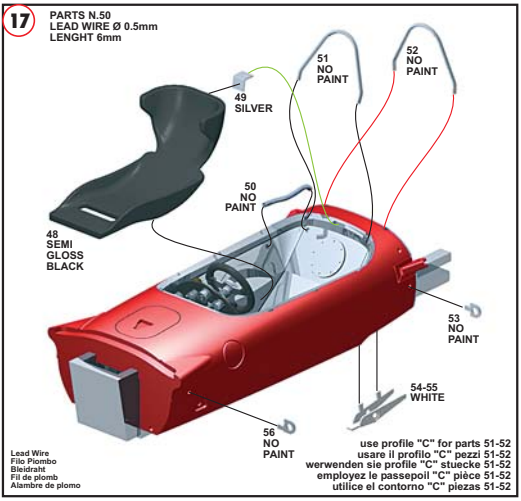
PARTS N.50
LEAD WIRE Ø 0.5mm
LENGHT 6mm
51
NO
PAINT
52
NO
PAINT
49
SILVER
50
NO
PAINT
48
SEMI
GLOSS
BLACK
53
NO
PAINT
54-55
WHITE
56
NO
PAINT
Lead Wire
Filo Piombo
Bleidraht
Fil de plomb
Alambre de plomo
use profile "C" for parts 51-52
usare il profilo "C" pezzi 51-52
werwenden sie profile "C" stuecke 51-52
employez le passepoil "C" pièce 51-52
utilice el contorno "C" piezas 51-52

18

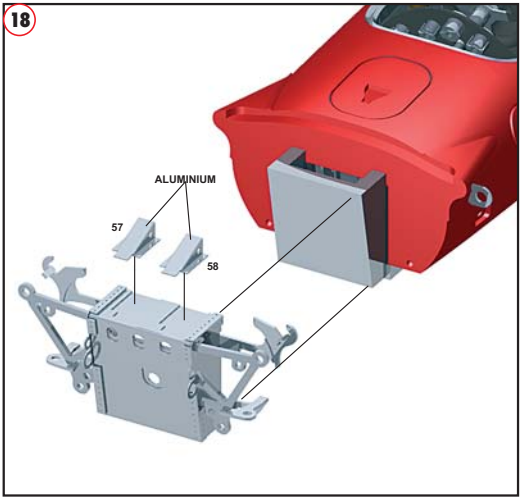

19

use profile "A" on photoetched 999
usare il profilo "A" sulla fotoincisione 999
werwenden sie profile "A" ueber fotogaetzt 999
employez le passepoil "A" sur la photogravures 999
utilice el contorno "A" sobre el fotograbado 999

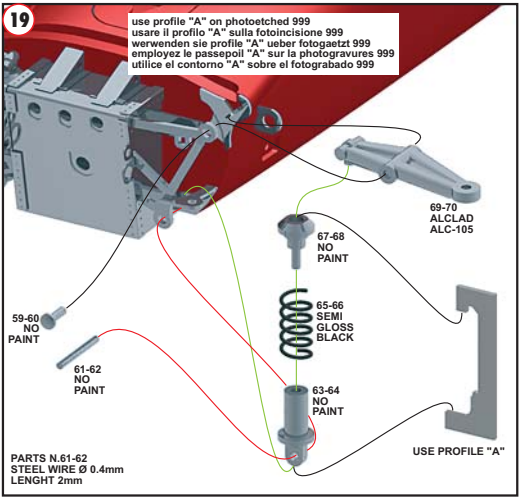

PARTS N.61-62
STEEL WIRE Ø 0.4mm
LENGHT 2mm

20

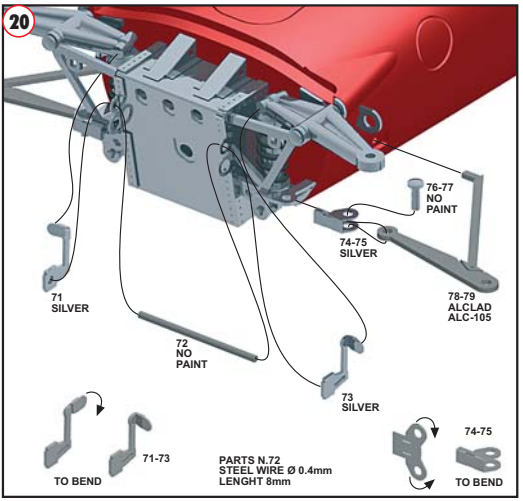

PARTS N.72
STEEL WIRE Ø 0.4mm
LENGHT 8mm

21

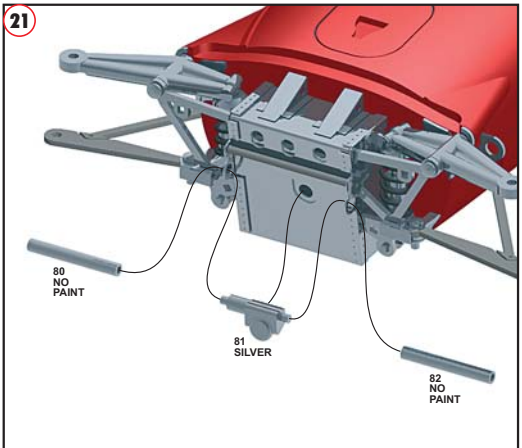

22

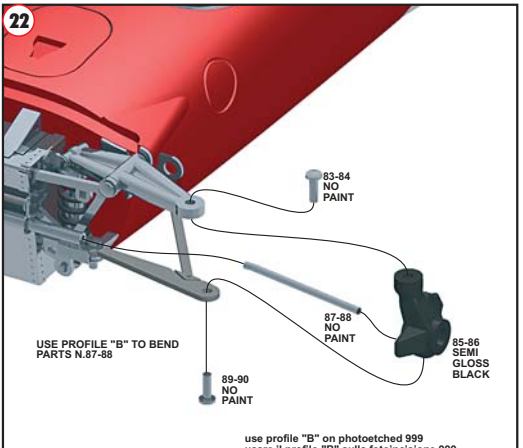

PARTS N.87-88
STEEL WIRE Ø 0.4mm
LENGHT 8mm

use profile "B" on photoetched 999
usare il profilo "B" sulla fotoincisione 999
werwenden sie profile "B" ueber fotogaetzt 999
employez le passepoil "B" sur la photogravures 999
utilice el contorno "B" sobre el fotograbado 999

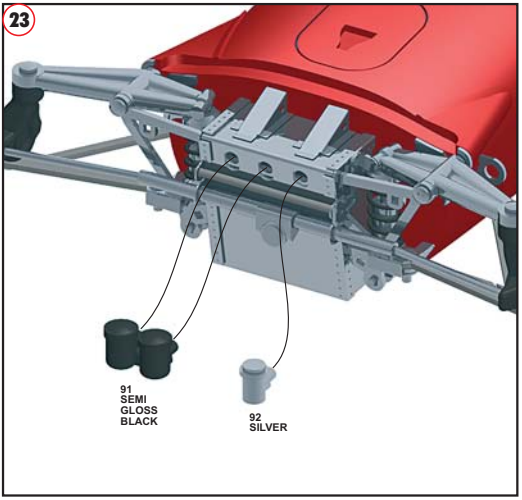
23
91
SEMI
GLOSS
BLACK
92
SILVER

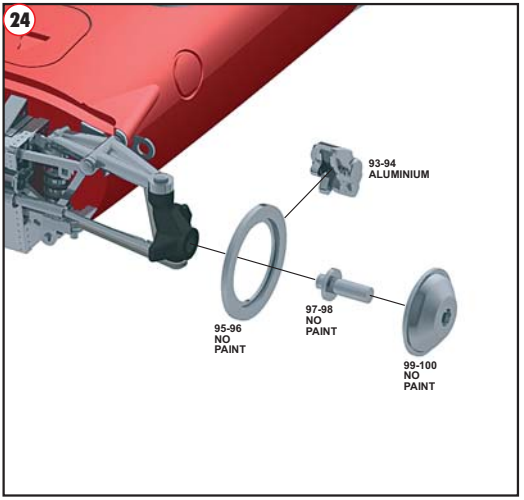
24
93-94
ALUMINIUM
95-96
NO
PAINT
97-98
NO
PAINT
99-100
NO
PAINT

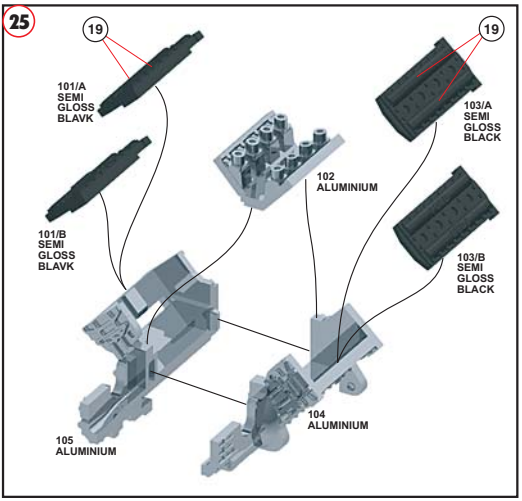
25
19
19
101/A
SEMI
GLOSS
BLAVK
103/A
SEMI
GLOSS
BLACK
102
ALUMINIUM
101/B
SEMI
GLOSS
BLAVK
103/B
SEMI
GLOSS
BLACK
104
ALUMINIUM
105
ALUMINIUM

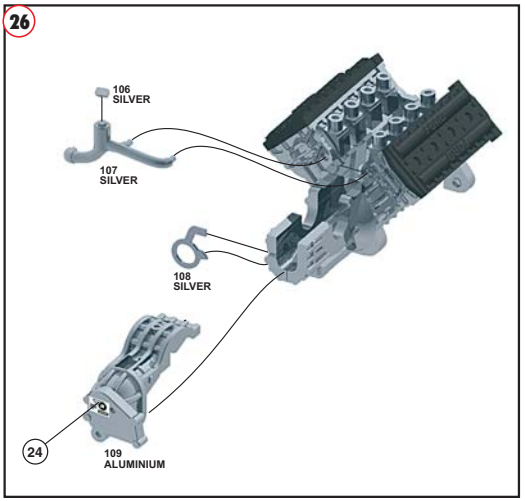
26
106
SILVER
107
SILVER
108
SILVER
24
109
ALUMINIUM

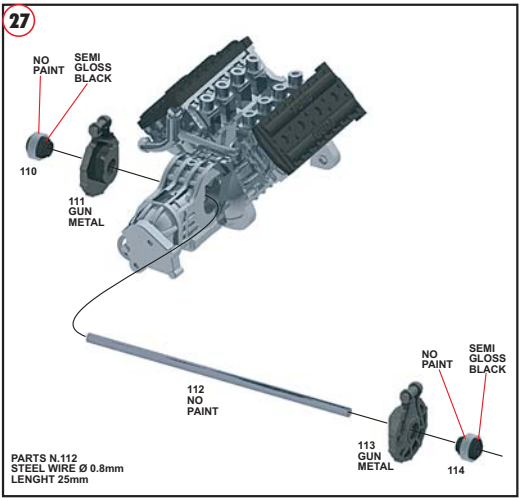
27
NO
PAINT
SEMI
GLOSS
BLACK
110
111
GUN
METAL
112
NO
PAINT
NO
PAINT
SEMI
GLOSS
BLACK
113
GUN
METAL
114
PARTS N.112
STEEL WIRE Ø 0.8mm
LENGHT 25mm

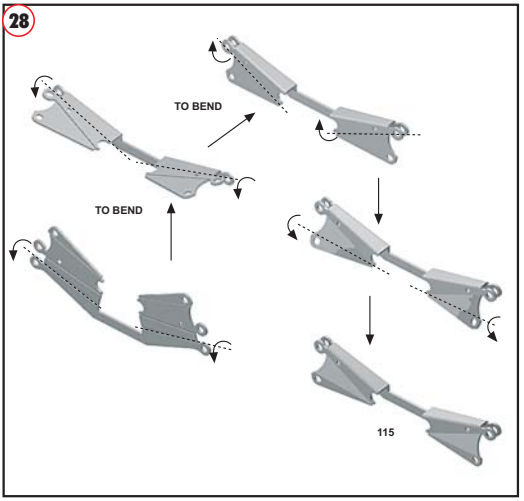
28
TO BEND
TO BEND
115

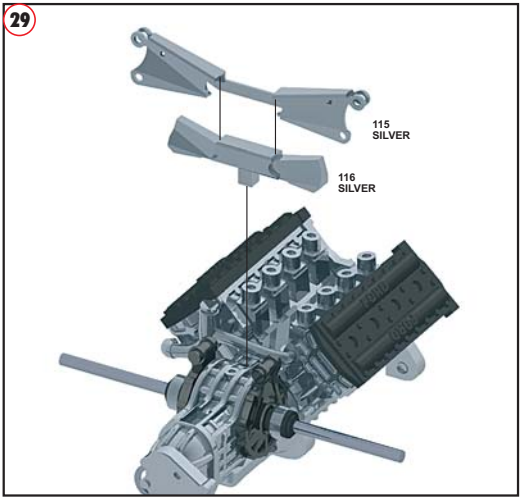
29
115
SILVER
116
SILVER

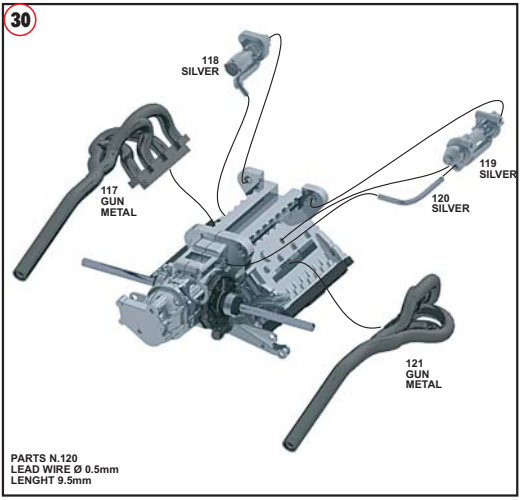
30
118
SILVER
117
GUN
METAL
119
SILVER
120
SILVER
121
GUN
METAL
PARTS N.120
LEAD WIRE Ø 0.5mm
LENGHT 9.5mm

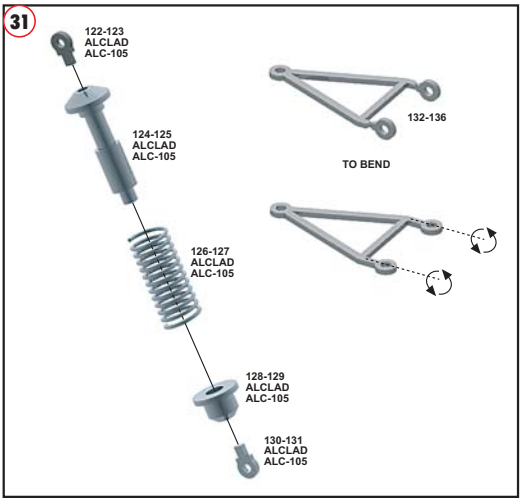
31
122-123
ALCLAD
ALC-105
124-125
ALCLAD
ALC-105
126-127
ALCLAD
ALC-105
128-129
ALCLAD
ALC-105
130-131
ALCLAD
ALC-105
132-136
TO BEND

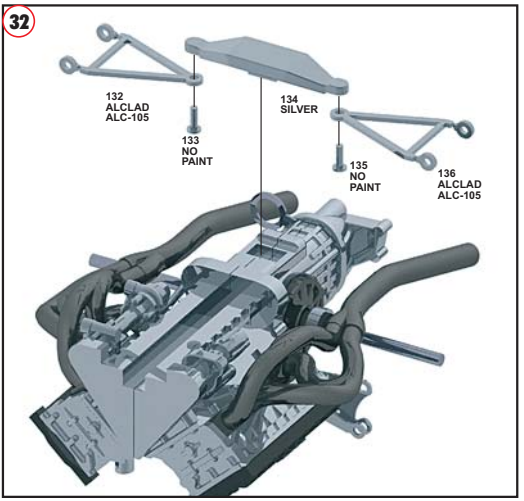
32
132
ALCLAD
ALC-105
133
NO
PAINT
134
SILVER
135
NO
PAINT
136
ALCLAD
ALC-105

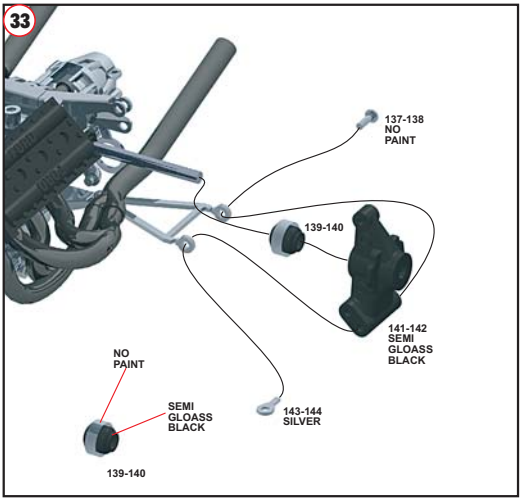
33
137-138
NO
PAINT
139-140
141-142
SEMI
GLOASS
BLACK
NO
PAINT
SEMI
GLOASS
BLACK
143-144
SILVER
139-140

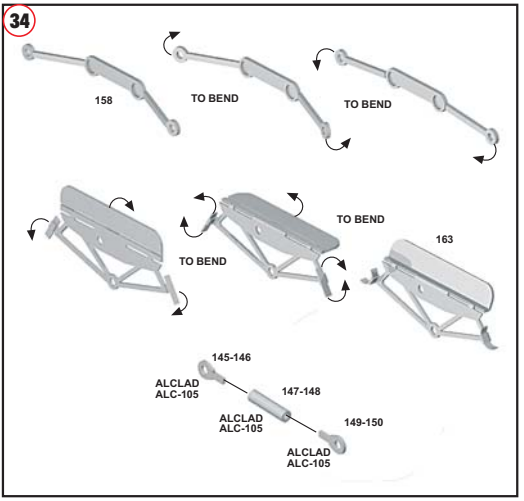
34
158
TO BEND
TO BEND
TO BEND
TO BEND
163
145-146
ALCLAD
ALC-105
147-148
ALCLAD
ALC-105
149-150
ALCLAD
ALC-105

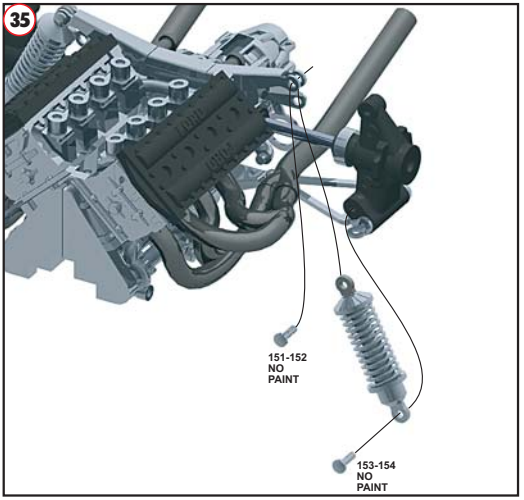
35
151-152
NO
PAINT
153-154
NO
PAINT

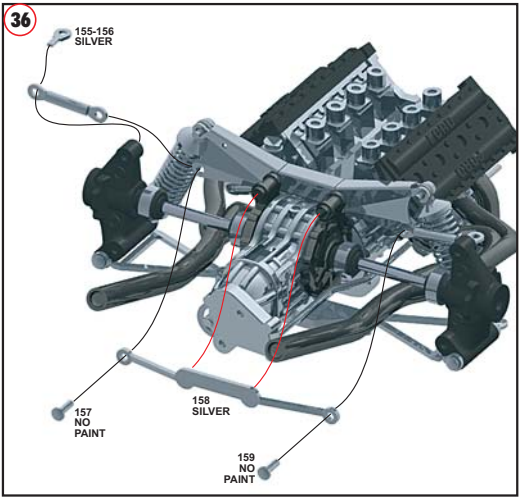
36
155-156
SILVER
157
NO
PAINT
158
SILVER
159
NO
PAINT

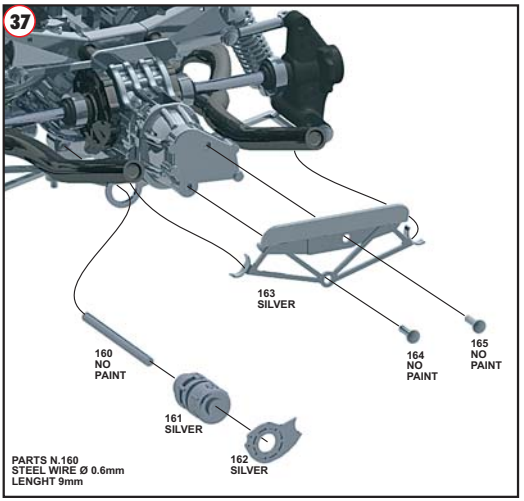
37
163
SILVER
160
NO
PAINT
164
NO
PAINT
165
NO
PAINT
161
SILVER
162
SILVER
PARTS N.160
STEEL WIRE Ø 0.6mm
LENGHT 9mm

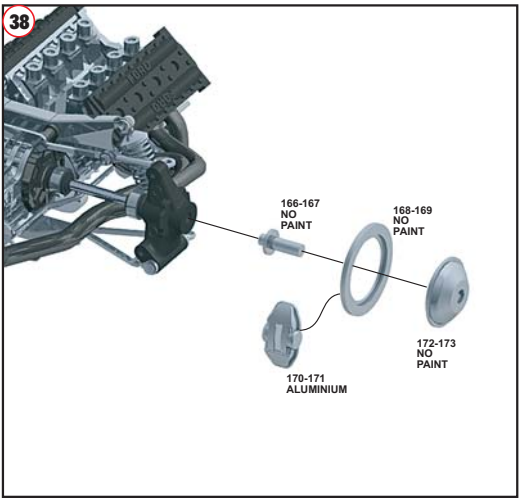
38
166-167
NO
PAINT
168-169
NO
PAINT
172-173
NO
PAINT
170-171
ALUMINIUM

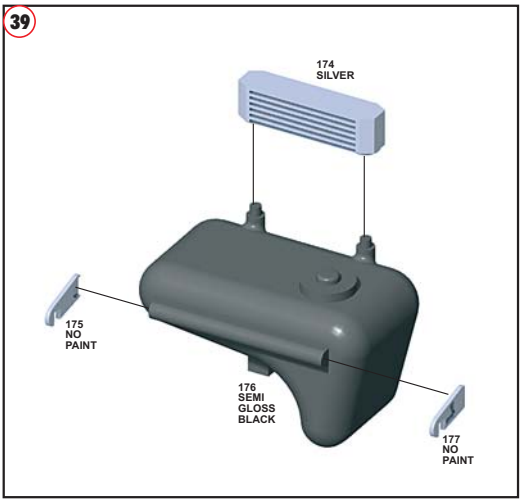
39
174
SILVER
175
NO
PAINT
176
SEMI
GLOSS
BLACK
177
NO
PAINT

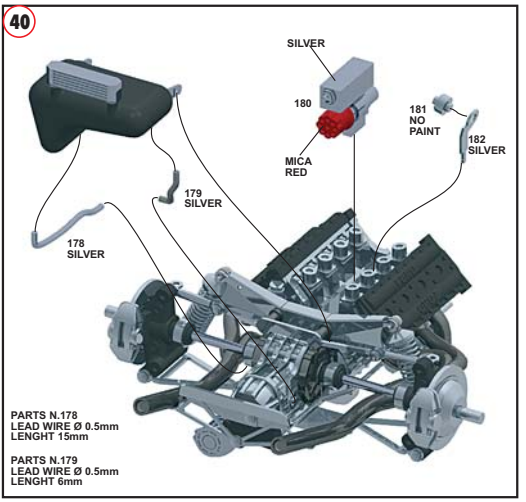
40
SILVER
180
MICA
RED
181
NO
PAINT
182
SILVER
179
SILVER
178
SILVER
PARTS N.178
LEAD WIRE Ø 0.5mm
LENGHT 15mm
PARTS N.179
LEAD WIRE Ø 0.5mm
LENGHT 6mm

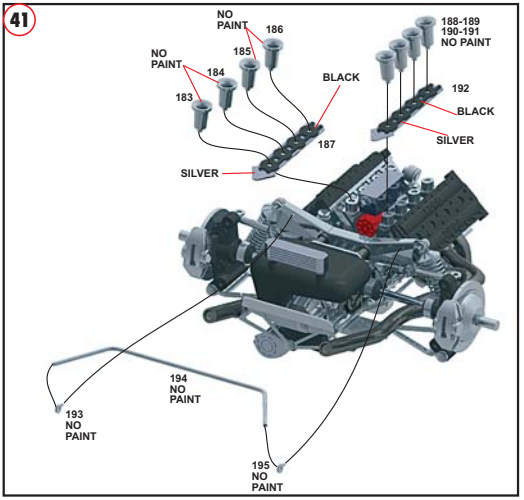
41
NO PAINT
186
NO PAINT
185
184
183
BLACK
187
188-189
190-191
NO PAINT
192
BLACK
SILVER
SILVER
194
NO PAINT
193
NO PAINT
195
NO PAINT

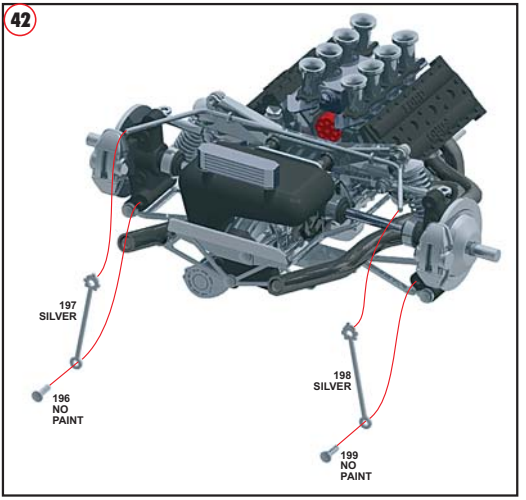
42
197
SILVER
196
NO PAINT
198
SILVER
199
NO PAINT

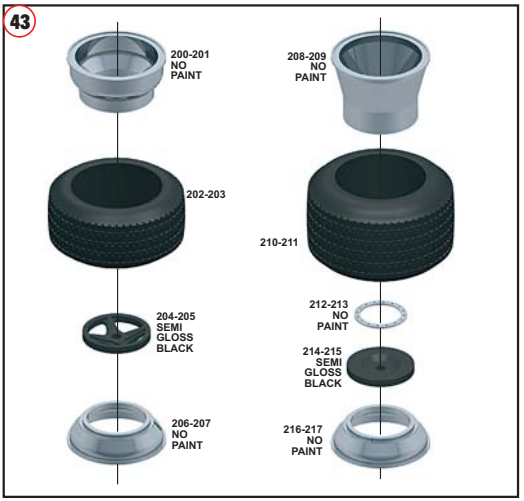
43
200-201
NO PAINT
202-203
204-205
SEMI GLOSS BLACK
206-207
NO PAINT
208-209
NO PAINT
210-211
212-213
NO PAINT
214-215
SEMI GLOSS BLACK
216-217
NO PAINT

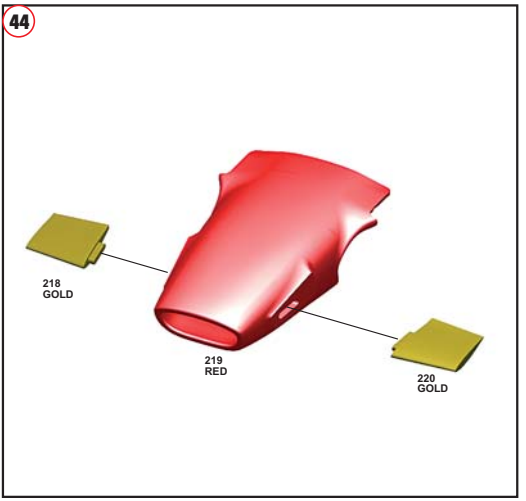
44
218
GOLD
219
RED
220
GOLD

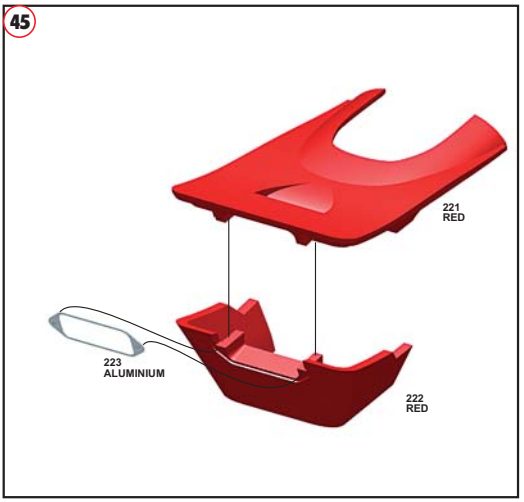
45
221
RED
223
ALUMINIUM
222
RED

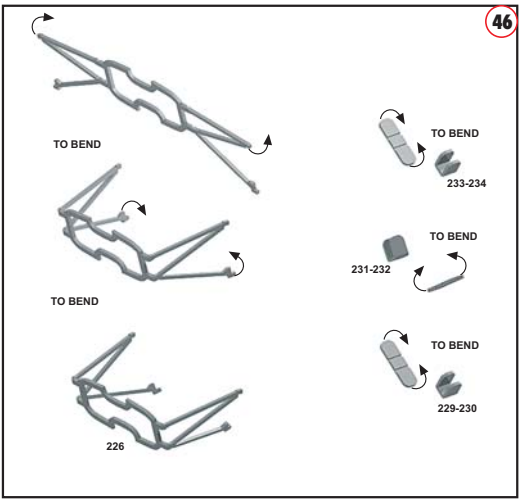
46
TO BEND
TO BEND
226
TO BEND
233-234
TO BEND
231-232
TO BEND
229-230

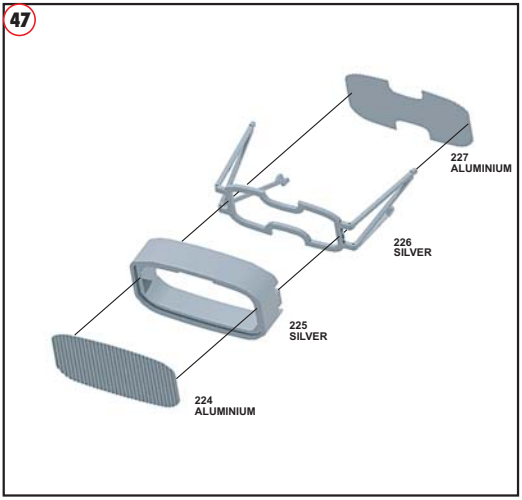
47
227
ALUMINIUM
226
SILVER
225
SILVER
224
ALUMINIUM

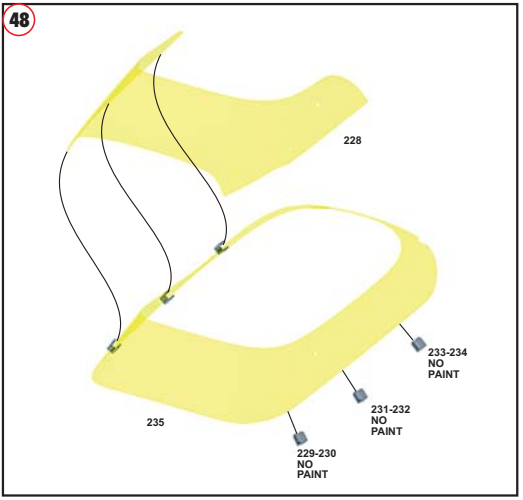
48
228
233-234
NO
PAINT
231-232
NO
PAINT
235
229-230
NO
PAINT

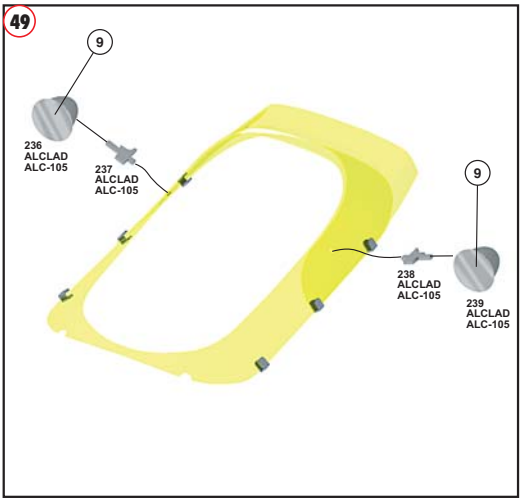
49
9
236
ALCLAD
ALC-105
237
ALCLAD
ALC-105
9
238
ALCLAD
ALC-105
239
ALCLAD
ALC-105

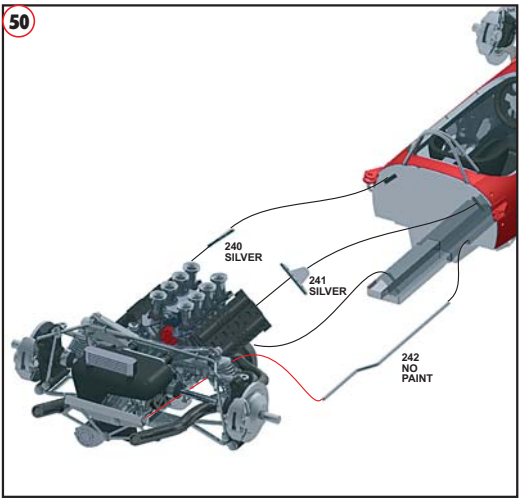
50
240
SILVER
241
SILVER
242
NO
PAINT

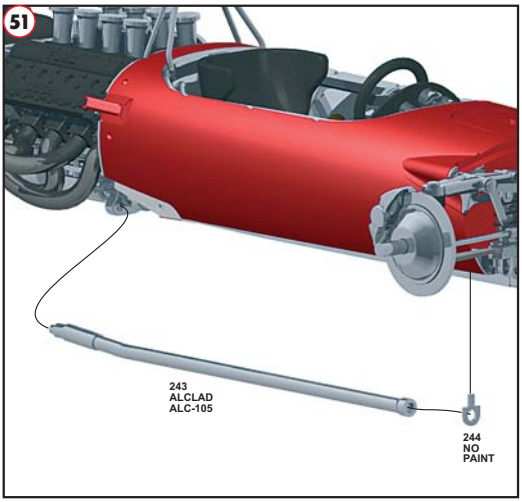
51
243
ALCLAD
ALC-105
244
NO
PAINT

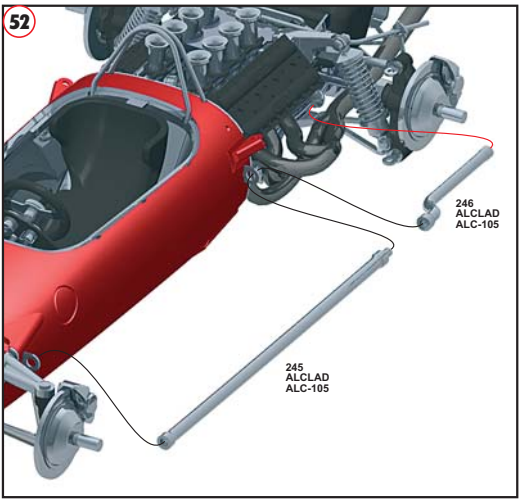
52
246
ALCLAD
ALC-105
245
ALCLAD
ALC-105

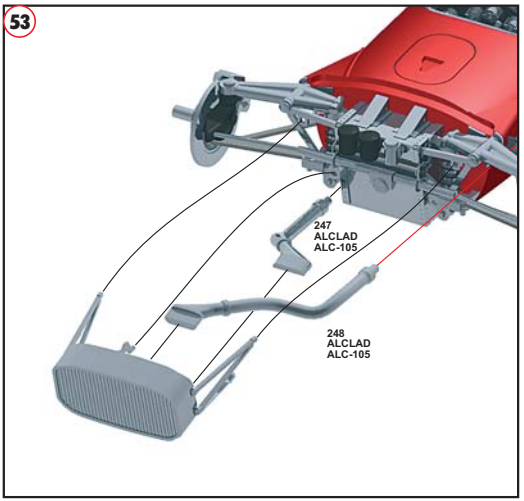
53
247
ALCLAD
ALC-105
248
ALCLAD
ALC-105

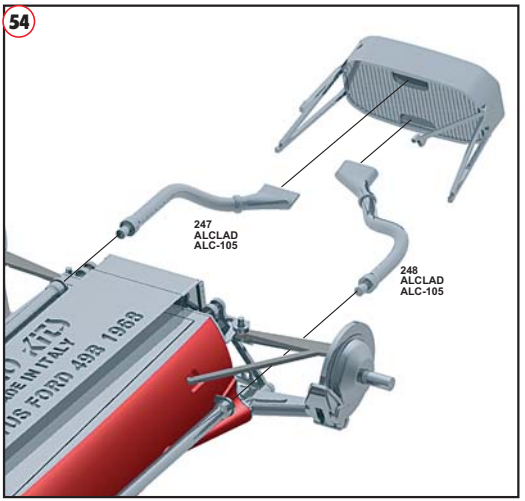
54
247
ALCLAD
ALC-105
248
ALCLAD
ALC-105

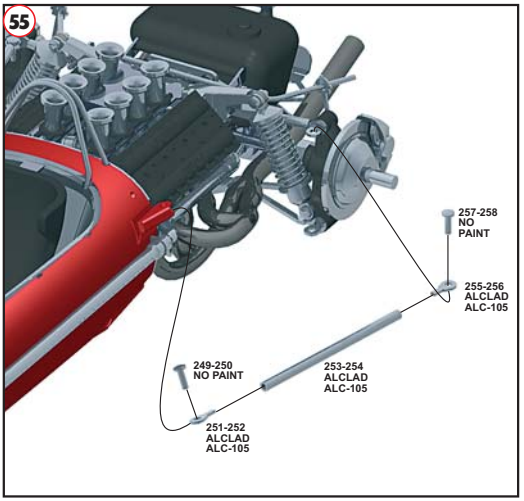
55
257-258
NO
PAINT
255-256
ALCLAD
ALC-105
249-250
NO PAINT
253-254
ALCLAD
ALC-105
251-252
ALCLAD
ALC-105

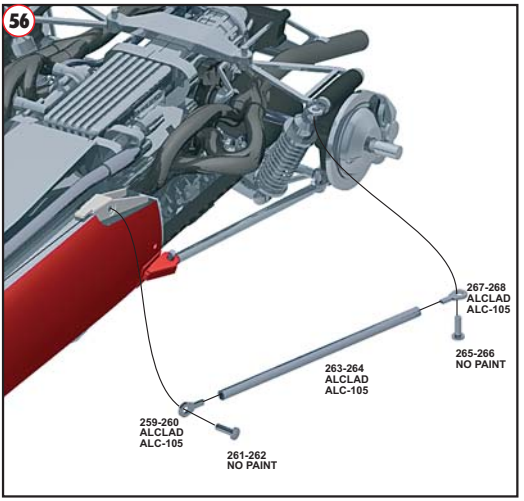
56
267-268
ALCLAD
ALC-105
265-266
NO PAINT
263-264
ALCLAD
ALC-105
259-260
ALCLAD
ALC-105
261-262
NO PAINT

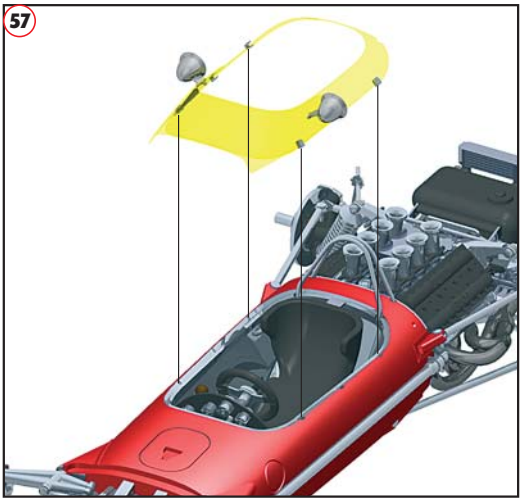
57

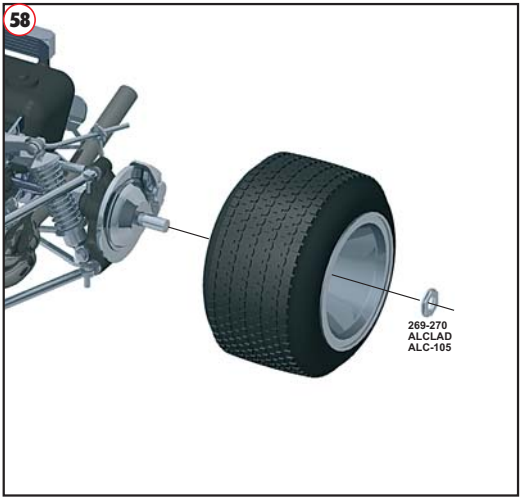
58
269-270
ALCLAD
ALC-105

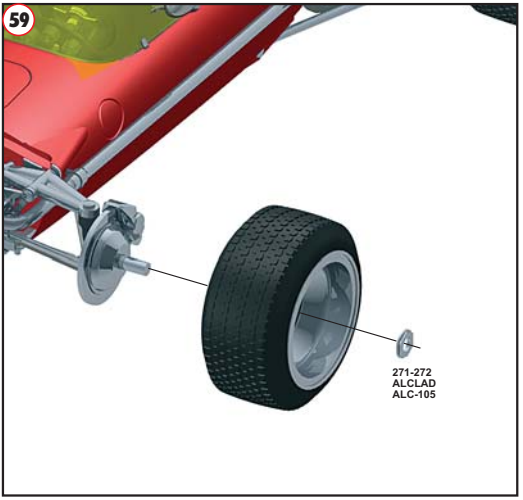
59
271-272
ALCLAD
ALC-105

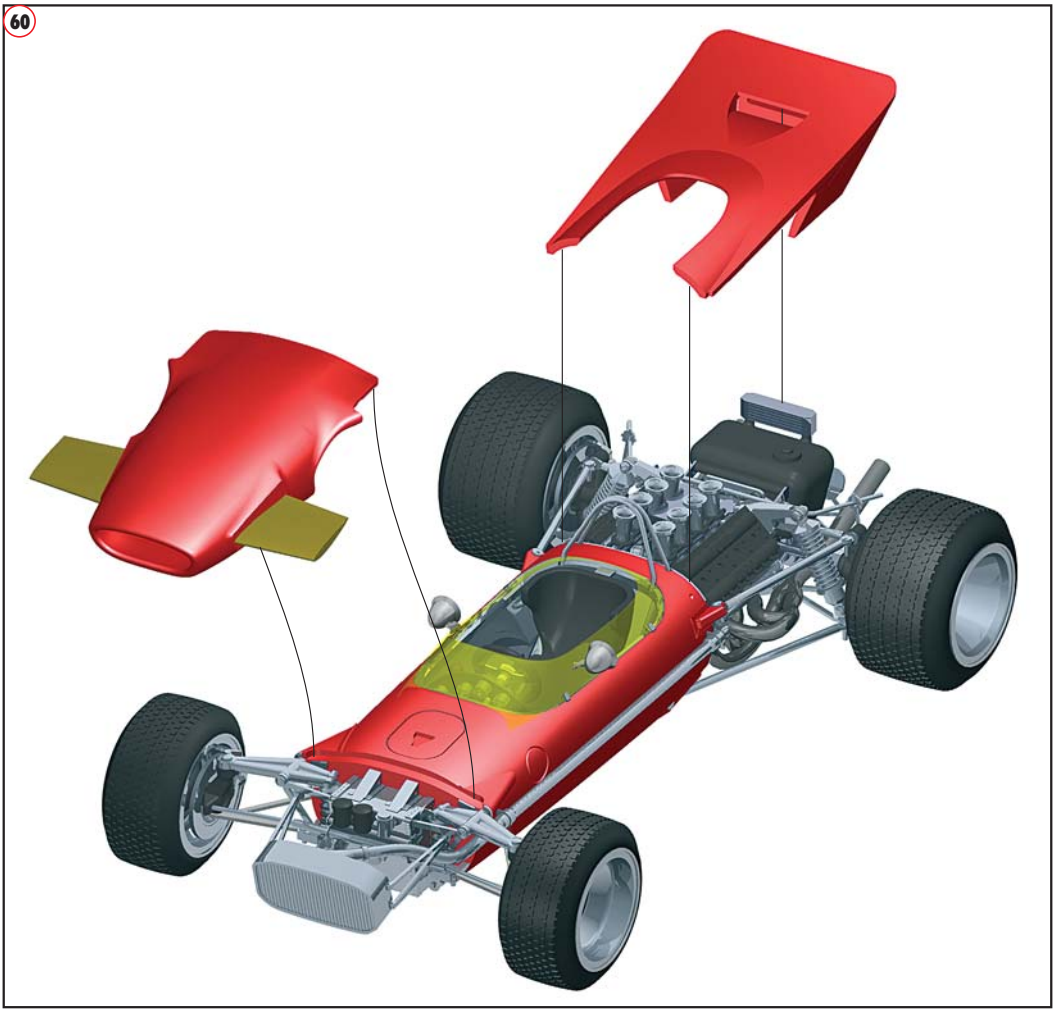
60

WCT 68 - LOTUS FORD 49B MONACO G.P. 1968

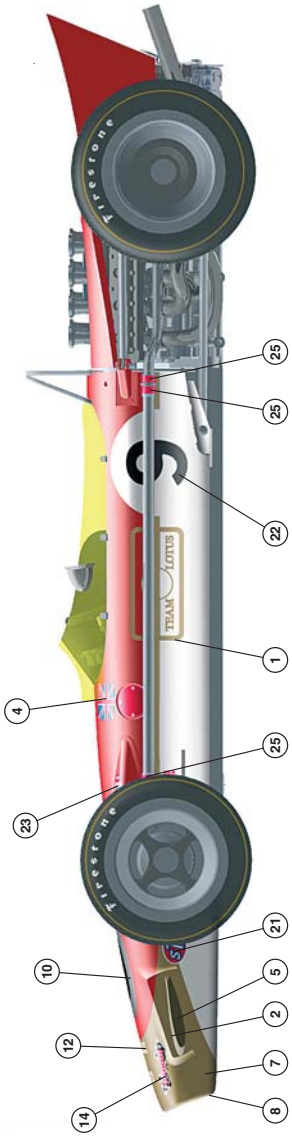

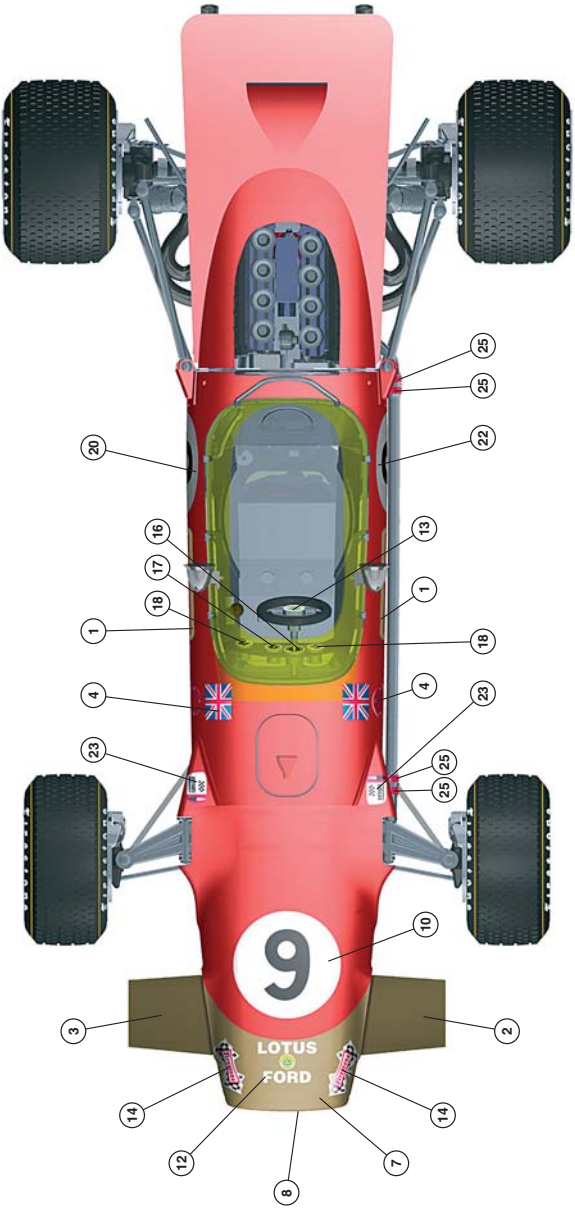

9 - Graham Hill 1st

BP
9
LOTUS
FORD

BP
Shell
9
LOTUS
FORD

9
PLAYER'S NAVY CUT
TEAM LOTUS

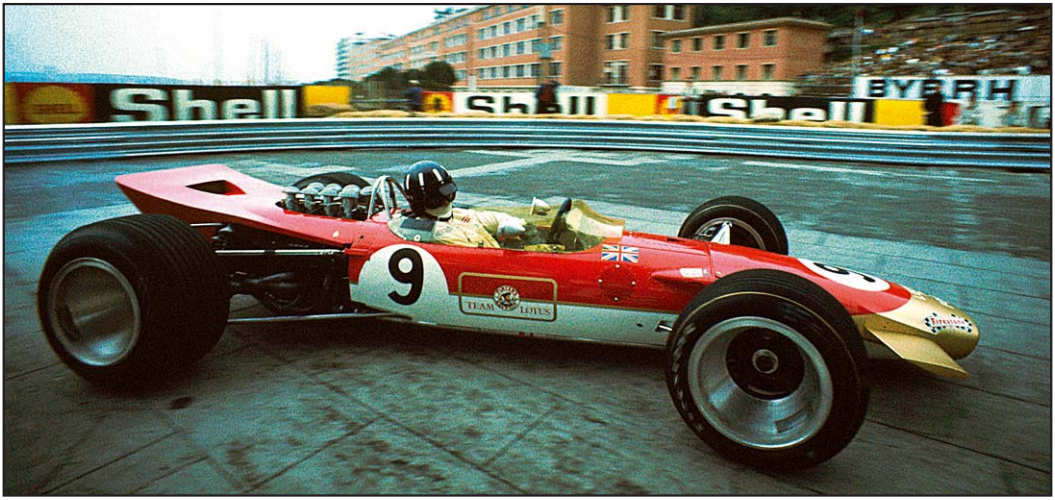
Shell
Shell
Shell
9
TEAM LOTUS

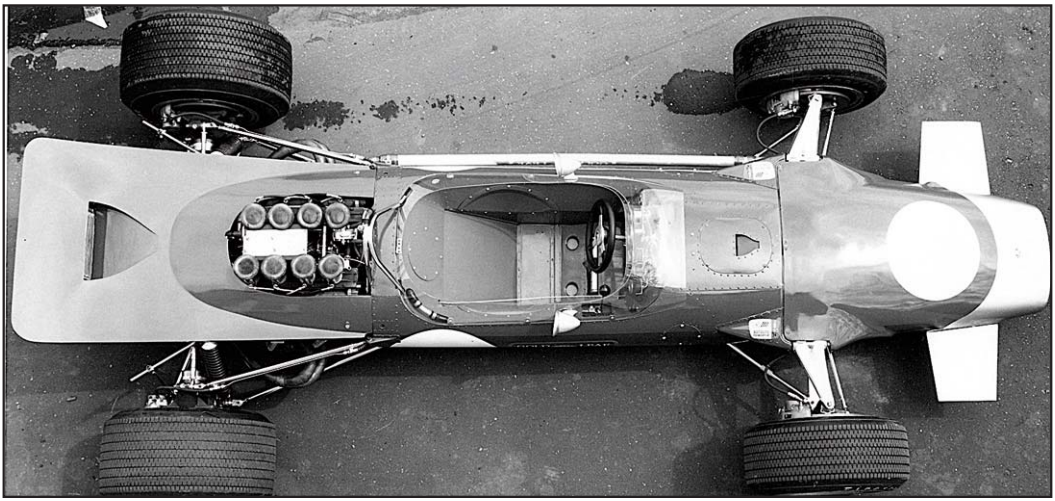

9
TEAM LOTUS